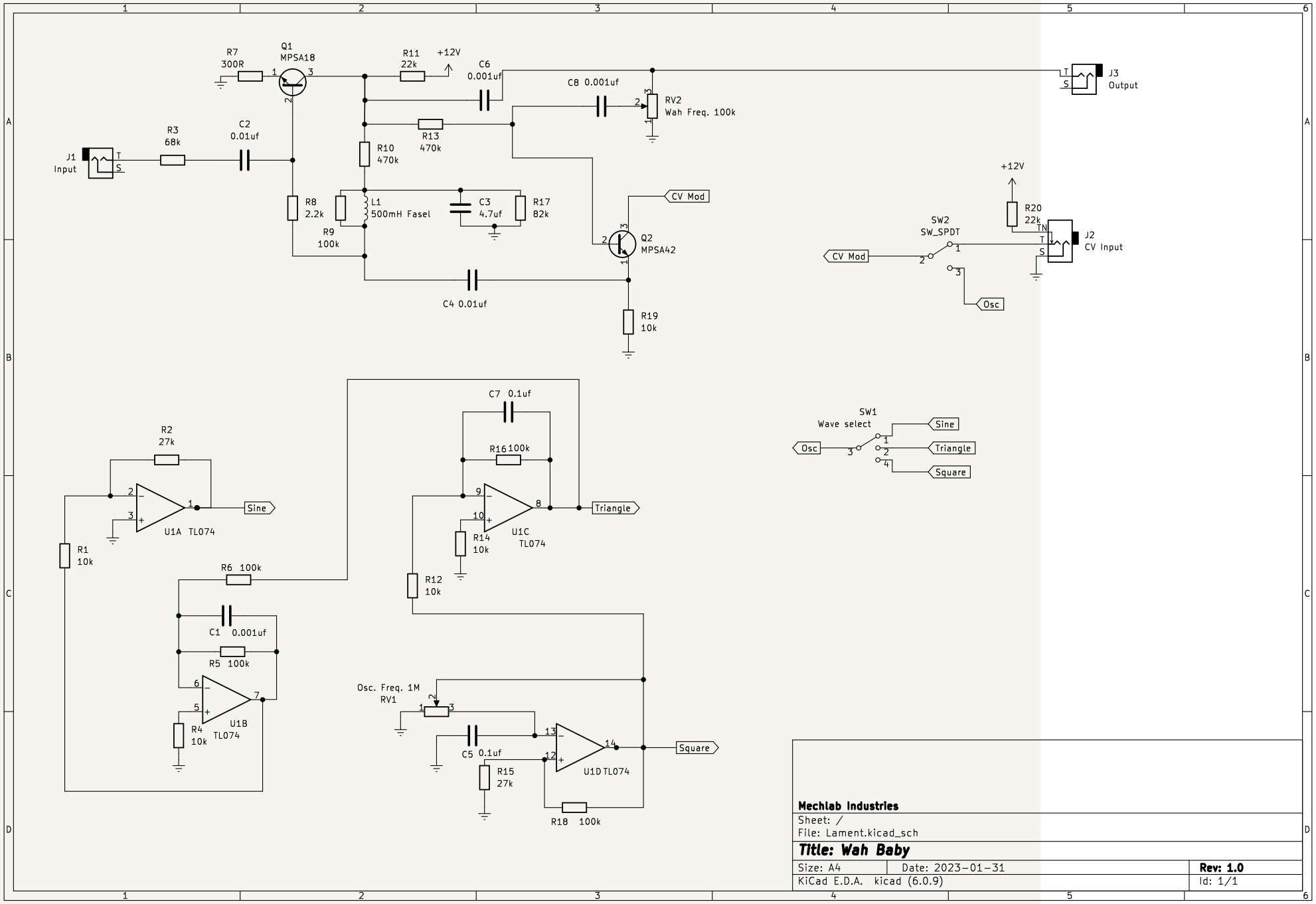

Mechlab Industries

Sheet: /

File: Lament.kicad_sch

Title: Wah Baby

Size: A4	Date: 2023-01-31	**Rev: 1.0**
KiCad E.D.A. kicad (6.0.9)		Id: 1/1